THIS DRAWING AND DESIGN HEREON CONSTITUTES A PROPRIETARY DESIGN OF PACKARD ELECTRIC DIVISION AND IS NOT TO BE DUPLICATED OR REPRODUCED WITHOUT AUTHORITY OF PACKARD ELECTRIC DIVISION.

DO NOT SCALE

PART NO. 1211 0254

PART NO. 1211 0254

DATE	SYM	REVISION RECORD	AUTHORITY	DR	CK
26OC89	A	P.E. DWG. CREATION.	890012	RJH	-
28NO89	B	REVISED.	131649	RJH	TMN
25NO91	B1	WAS PE019699 AND RELEASED.	910005	WHP	HH
11MR93	B2	B1 WAS C IN REV RECORD & REVISED			
		TOLERANCE TO 1 DIM	154937	BAR	BAR

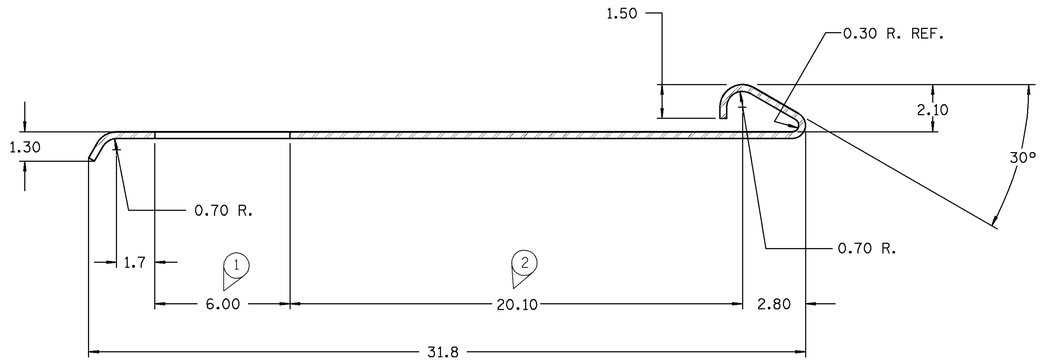

SECTION A-A

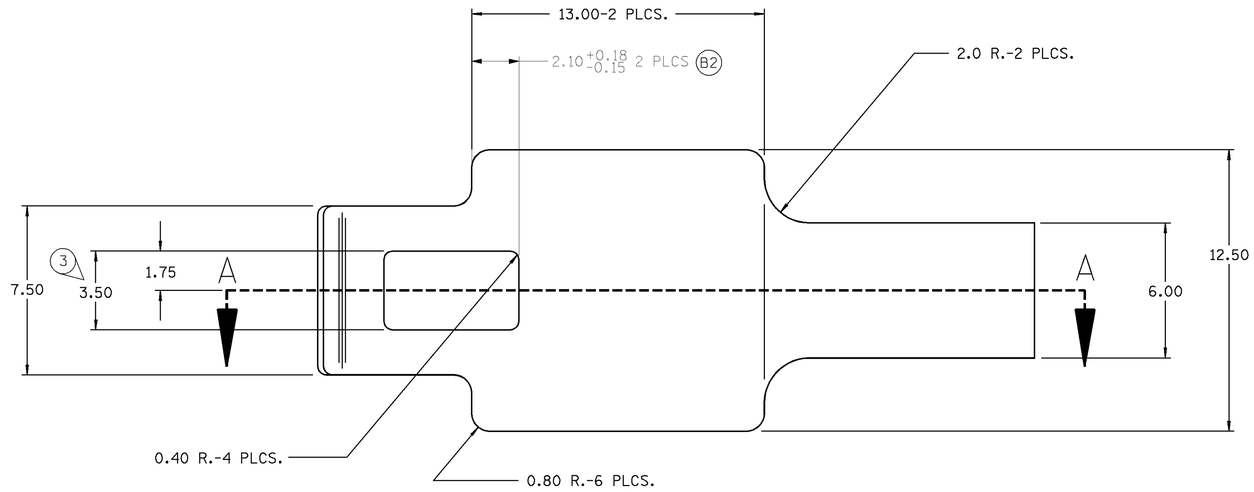

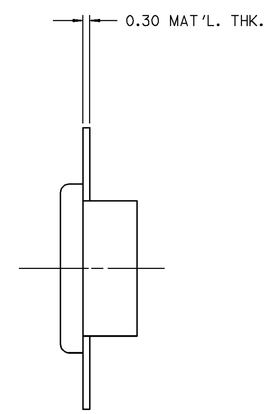

NOTES-
1. DIMENSIONS ARE TO FACE OF VIEW SHOWN, UNLESS OTHERWISE INDICATED.
2. A 0.40 R. IS PERMISSIBLE ON ALL "SHARP" CORNERS UNLESS OTHERWISE SPECIFIED.
3. THIS PART MATES TO CONNECTOR 1211 0252 OR EQUIVALENT.
4. " ⌀ " DENOTES DIMENSIONS AND CHARACTERISTICS THAT ARE IMPORTANT TO THE FUNCTION AND/OR PROCESSING OF THE PART. IT DOES NOT NECESSARILY INDICATE AN SPC DIMENSION. THIS DRAWING HAS 3 SNOWCONES.

PACKARD ELECTRIC DIVISION
GENERAL MOTORS CORPORATION
WARREN, OHIO

PED/INTERGRAPH EMS

THIRD ANGLE PROJECTION

FILE SPEC: ****USER****
DGN&SPECIFICATION**********
*****SYTIME******

METRIC
DIMENSIONS ARE IN MILLIMETERS UNLESS OTHERWISE SPECIFIED.

CODE NO. 6901

TOLERANCE UNLESS OTHERWISE SPECIFIED
DECIMAL: ONE PLACE ± 0.3, TWO PLACE ± 0.15, ANGULAR ±2°

Q.C. -R-3059

DWG. DATE 26OC89 | SCALE 8:1

DR. R.J. HRUSOVSKY 26OC89

EST. NO.

CK. T.M. NADASKY DATE 28NO89

REFERENCE NO.

APPR. A. RASCHILLA DATE 29NO89

APPR. R.A. PETROSKY DATE 29NO89

MATERIAL SPEC. PM000921 ST STL - 301 HARD - 0.30 THK

NAME CLIP

PART NO. 1211 0254

SIZE D

PACKARD ELECTRIC