D

THIS DRAWING AND DESIGN HEREON CONSTITUTES A PROPRIETARY DESIGN OF PACKARD ELECTRIC DIVISION AND IS NOT TO BE DUPLICATED OR REPRODUCED WITHOUT AUTHORITY OF PACKARD ELECTRIC DIVISION.

DO NOT SCALE

PART NO. 1205 9472

PART NO. 1205 9472

DATE	SYM	REVISION RECORD	AUTH	DR	CK
22AP87	—	REDRAWN FROM "C" SIZE & REVISED:			
		REV. LEVEL REMAINS AT "A"	113187	DJT	FH
14MY87	—	ADDED DIM "1.10 0.8 R.			
		ALL AROUND SHROUD"	113782	RS	DR
15SE87	—	ADDED NOTE #7.	115423	JP	FH
15SE87	—	ADDED 5.650/5.350 R. - 4 PLCS. DIM.			
		IN MATING CONNECTOR INFORMATION.	116008	JP	FH
14MR88	A1	REVISED SHROUD BASE, 14.200/13.900 DIM			
		WAS 14.500/14.200, ADDED 10.00 DIM.			
		NOTE #5, & "NO PROTRUSIONS			
		PERMITTED PAST THIS SURFACE" DIM.	118601	JC	DKS
07JL88	A2	MATING TERMINAL 12048074 WAS			
		12045773	120831	JAB	BAR
29N088	—	REVISED LOCK ARM & REMOVED			
		PATENT PENDING	123465	TLB	JH
29N088	B	CONNECTOR SEAL WAS 12052198	123785	TLB	JH
31JL90	B1	12020833 WAS 12020883			
		IN NOTE #6	136052	GC	SC

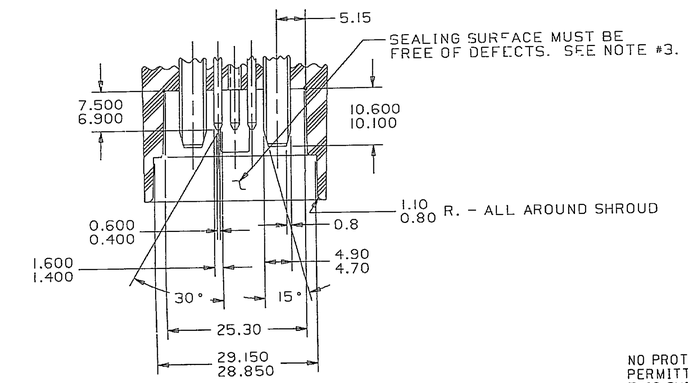

SECTION A-A

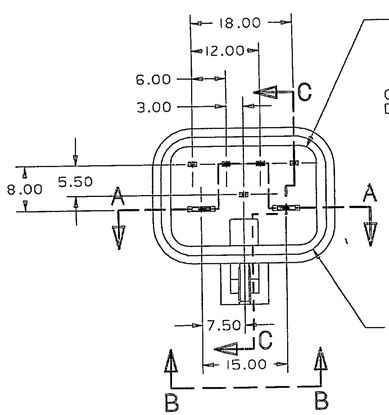

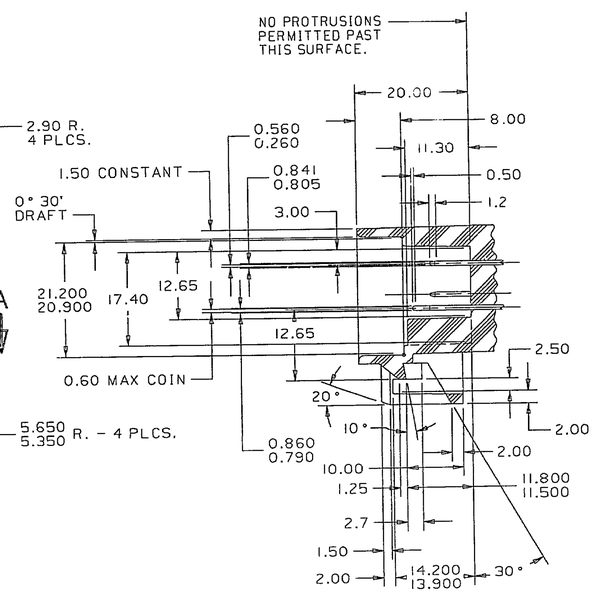

SECTION C-C

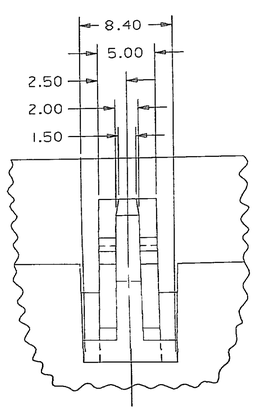

VIEW B-B
(SCALE 4:1)

MATING CONNECTOR INFORMATION

NOTES — 1. WHEN USING THIS INFORMATION FOR A NEW DESIGN, REQUEST THE LATEST COPY OF THIS PRINT FROM PACKARD ELECTRIC DIVISION.

2. ALL RADII 0.40, UNLESS OTHERWISE SPECIFIED.

3. THIS SURFACE IS "CRITICAL" FOR PART FUNCTION. ALSO, ALL THREE PLACE DIMENSIONS ARE CRITICAL.

4. THE SHAPE OF THE SHROUD AND LOCK ARE REPRESENTATIVE. VARIATIONS FOR ADAPTING THE SHROUD FOR SPECIFIC DEVICES AND/OR MOLDING METHODS ARE PERMITTED AS LONG AS FUNCTION IS MAINTAINED.

5. NON-STANDARD DETAILS, DUPLICATION MUST BE APPROVED BY PACKARD ELECTRIC.

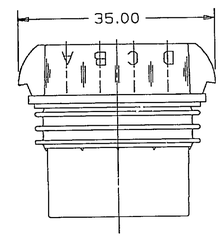

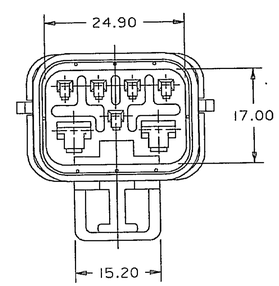

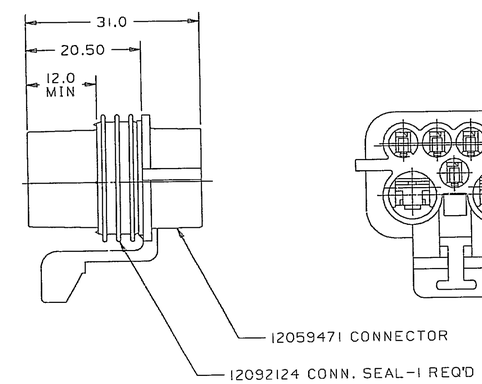

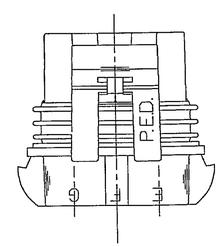

As of 31JL90 drawing is no longer maintained on computer vision.

C04D2000

NOTES — 1. DIMENSIONS ARE TO FACE OF VIEW, UNLESS OTHERWISE INDICATED.

2. MATING COMPONENT-CONN. BODY 12052200 OR EQUIVALENT.

3. CAVITIES A,B,C,D,&F ARE IDENTICAL AND ACCEPT TERMINAL 12048074 OR EQUIVALENT AND CABLE SEAL 12048086 OR EQUIVALENT.

4. CAVITIES E AND G ARE IDENTICAL AND ACCEPT TERMINAL 12052139 OR EQUIVALENT AND CABLE SEAL 12034170 OR EQUIVALENT.

5. WHEN PARTS ARE SHIPPED THEY MUST BE PACKED IN PLASTIC BAGS OR SHIPPING CONTAINERS MUST BE LINED WITH PLASTIC LINERS. BAGS OR LINERS MUST BE SEALED TO AVOID ENTRY OF FOREIGN MATTER.

(B1) 6. ASSEMBLY TO ACCEPT TPA 12052486 AND CPA 12020833 OR EQUIVALENT.

7. SEALING CODE 3.

METRIC
DIMENSIONS ARE IN MILLIMETERS UNLESS OTHERWISE SPECIFIED

THIRD ANGLE PROJECTION

CODE NO. 6900	TOLERANCE UNLESS OTHERWISE SPECIFIED DECIMAL: ONE PLACE ± 0.3 TWO PLACE ± 0.15 ANGULAR ± 2°	
OC-C-5110		
DWG. DATE 230C84	SCALE 2:1	DR. Dan Thomas 22AP87
CD.A.12059472		CK. F. HESTON DATE 06MY87
REFERENCE NO.		APPR. D.BRANTINGHAM DATE 06MY87
		APPR. DATE
MATERIAL SPEC. SEE DRAWING		
NAME ASM CONN 7F M/P MXD		
PART NO. 1205 9472		SIZE D

PACKARD ELECTRIC

PACKARD ELECTRIC DIVISION
GENERAL MOTORS CORPORATION
WARREN, OHIO

-0-
60V
61P

197-A