DO NOT SCALE

PART NO 1210 3452

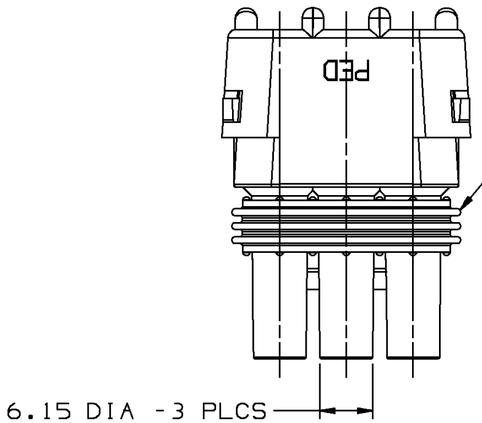

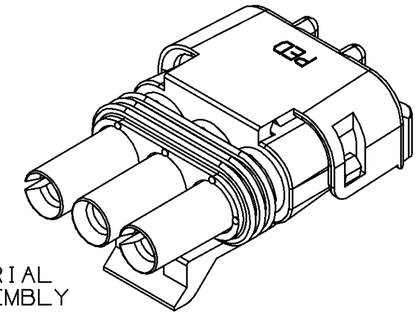

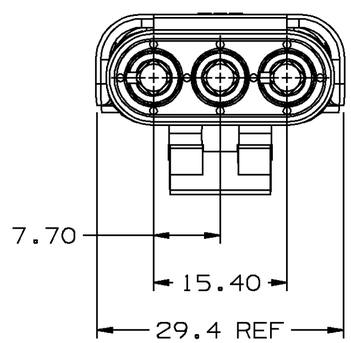

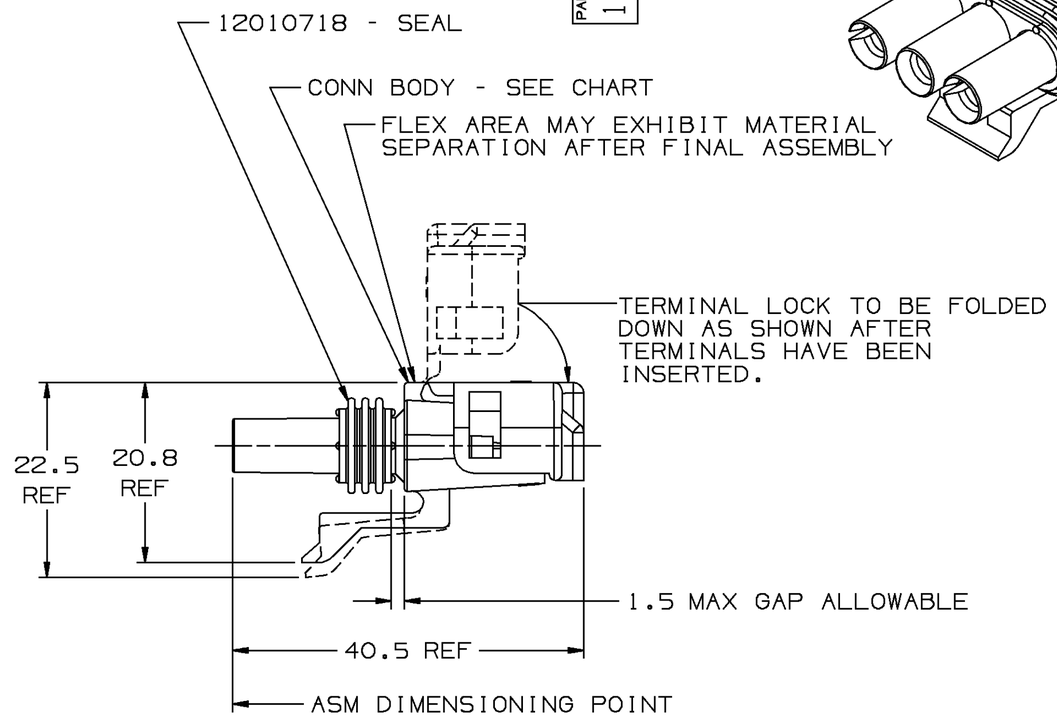

DATE	SYM	REVISION RECORD	AUTH	DR	CK
28MY96	—	ALL PARTS - REDRAWN &			
		REVISED - NO REV UPDATE			
		REQ'D	172539	OOD	JGS

PART NO 1210 3452

PACKARD ELECTRIC DIVISION
GENERAL MOTORS CORPORATION
WARREN, OHIO

INDEX CODE
-202-
(ALSO SEE HANDBOOK)

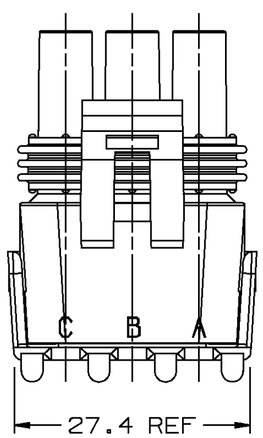

NOTES:

1. USE MALE TERMINAL ONLY, 12089040 OR EQUIVALENT.
2. USE CABLE SEAL 12015323 OR EQUIVALENT.
3. MATING PART - DEVICE
4. WHEN PARTS ARE SHIPPED, THEY MUST BE PACKED IN PLASTIC BAGS OR SHIPPING CONTAINERS MUST BE LINED WITH PLASTIC LINERS. BAGS OR LINERS MUST BE SEALED TO AVOID ENTRY OF FOREIGN MATTER.
5. SEALING CODE 3.
6. WHEN DESIGNING A PART TO MATE TO THIS WEATHER PACK CONNECTOR, REQUEST THE LATEST COPY OF DRAWING NUMBER 12020084 FROM THE PACKARD ELECTRIC DIVISION.
7. UNLESS OTHERWISE SPECIFIED AND/OR INDICATED: DIMENSIONS ARE TO FACE OF VIEW SHOWN AND AUTOMATICALLY ROUNDED BY COMPUTER FOR INSPECTION. (SEE MATH MODEL FOR PRECISE DIMENSION)

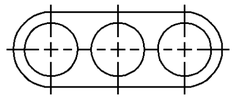

STANDARD CONSTRUCTION

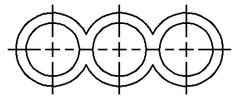

OPTIONAL CONSTRUCTION

CABLE END VIEW OF CONN BODY

PART NO	REV	STATUS	CONN BODY	APPLICATION	REF: TERMINAL/GENDER	MATING PART
12103451	A		12103449	DEVICE	12089040/MALE	DEVICE
12020403	A		12020194	DEVICE	12089040/MALE	DEVICE

Unigraphics II

THIRD ANGLE PROJECTION

METRIC
DIMENSIONS ARE IN MILLIMETERS UNLESS OTHERWISE SPECIFIED

TOLERANCE UNLESS OTHERWISE SPECIFIED
DECIMAL: ANGULAR ±2°
ONE PLACE ±0.3
TWO PLACE ±0.15

CODE NO 6900	QC -C-5110
DWG DATE 17MY90	DES
SCALE 2:1	DR STEVE MARZO 17MY90
REFERENCE NO 12103450 "AO" SIZE	CK STEVE MARZO 21MY90
	APPR A.R. HERMANN 24MY90
	VOL CM³

MATERIAL SPEC: SEE DRAWING

NAME: ASM CONN 3M W/P TWR

PART NUMBER 1210 3452 SIZE A2